Cable Management Metal Ring Panel, 2 RMS

PRODUCT SPECIFICATION

Package includes:

A. 2 RMS Cable Management Metal Ring Panel, 1 pc
B. #12-24 x 5/8" Pan Head, Pilot Point Machine Screw, 4 pcs

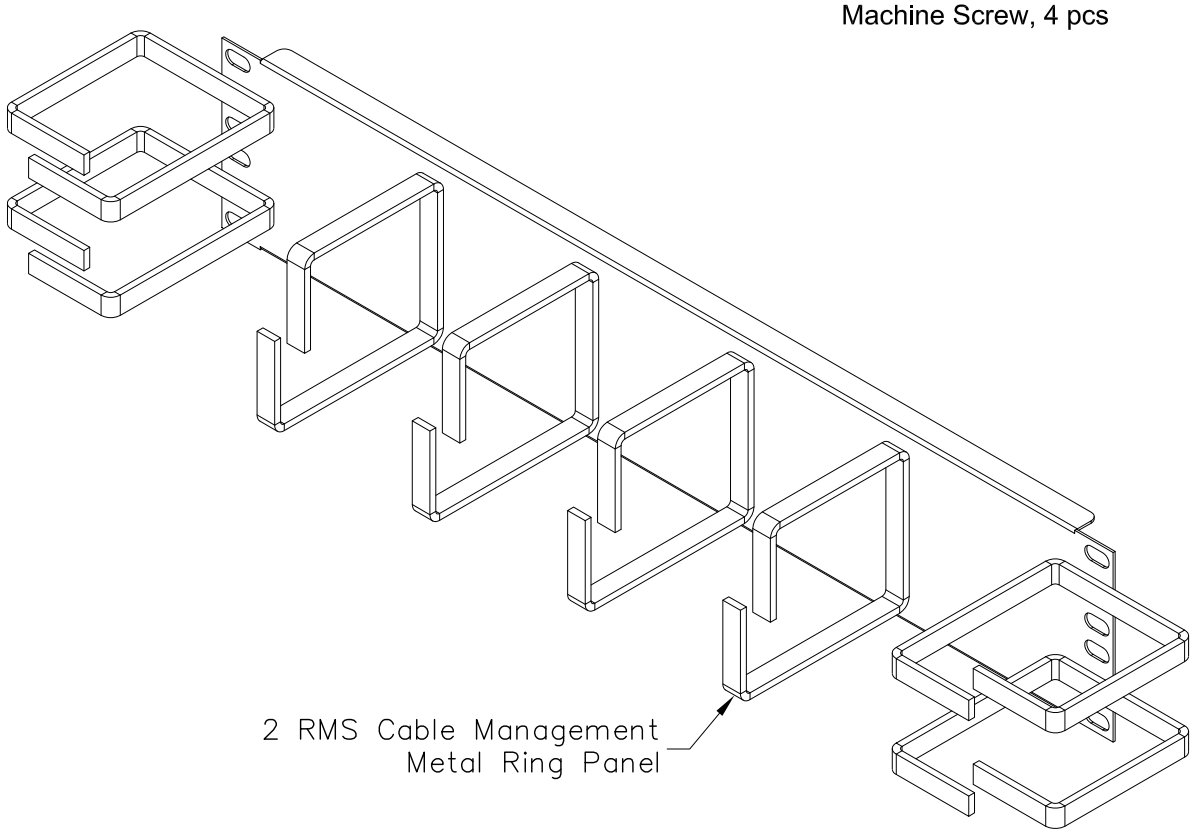

Features and Benefits:

- Provides flexibility for front cable manangement with a neat and clean appearance
- Designed with 4 horizontal and 2 vertical rings for patch cord organization in either direction
- Designed to fit all standard 19" racks and cabinets
- 2 rack mount space (RMS)
- Used with all ICCMS racks and brackets

PANEL, CABLE MANAGEMENT METAL RING, 2 RMS			
ITEM NO.	ICCMSCMP32	REV.	B
DWG NO.	PSCMSCMP32	PAGE NO.	1

ICC
Premium**Products**
Proven**Performance**
Competitive**Prices**

CUSTOMER CARE / TECHNICAL SUPPORT * CSR@ICC.COM / 888-ASK-4-ICC (275-4422) * 16800 Edwards Road, Cerritos, CA 90703 * Phone 562-356-3111 * Fax 562-356-3100 * www.icc.com

© 2005 ICC. THIS DOCUMENT AND THE DESIGNS, SPECIFICATIONS AND INFORMATION CONTAINED HEREIN ARE THE PROPERTY OF ICC. REPRODUCTION, MODIFICATION, ALTERATION, OR UNAUTHORIZED USE WITHOUT ICC'S APPROVAL IS STRICTLY PROHIBITED. ICC AND THE ICC LOGO ARE THE TRADENAME AND REGISTERED TRADEMARK OF ICC. ALL RIGHTS RESERVED.

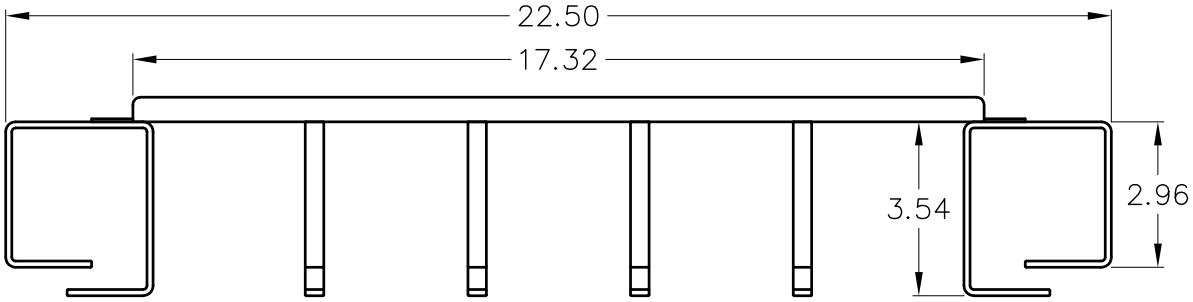

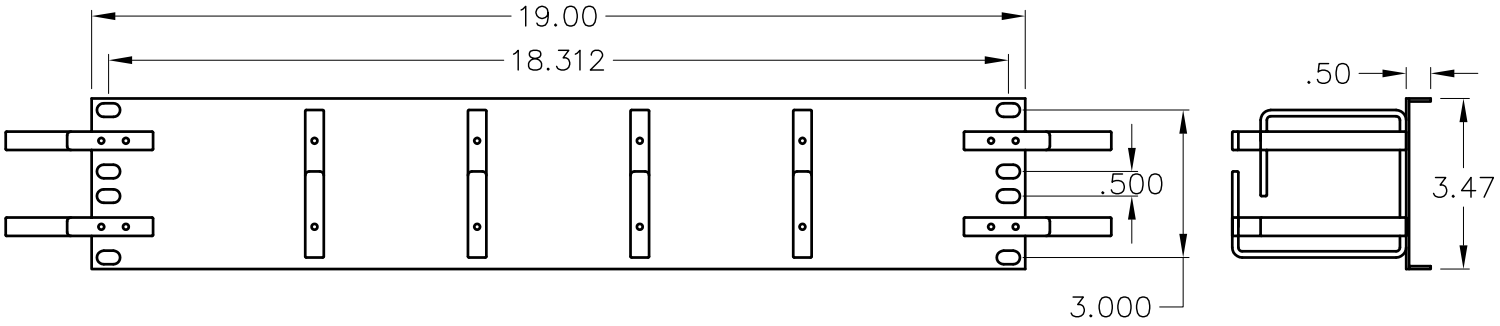

NOTE: UNLESS OTHERWISE SPECIFIED

1. MATERIAL:
   A. PANEL: 16 GA CRS
   B. RING: 1/8" X 3/8" CRS
2. SURFACE FINISH: BLACK TEXTURED POWDER COAT

PANEL, CABLE MANAGEMENT METAL RING, 2 RMS			
ITEM NO.	ICCMSCMP32	**REV.** B	
DWG NO.	PSCMSCMP32	**PAGE NO.** 2	

*Premium**Products***
*Proven**Performance***
*Competitive**Prices***

CUSTOMER CARE / TECHNICAL SUPPORT * CSR@ICC.COM / 888-ASK-4-ICC (275-4422) * 16800 Edwards Road, Cerritos, CA 90703 * Phone 562-356-3111 * Fax 562-356-3100 * www.icc.com

© 2005 ICC. THIS DOCUMENT AND THE DESIGNS, SPECIFICATIONS AND INFORMATION CONTAINED HEREIN ARE THE PROPERTY OF ICC. REPRODUCTION, MODIFICATION, ALTERATION, OR UNAUTHORIZED USE WITHOUT ICC'S APPROVAL IS STRICTLY PROHIBITED. ICC AND THE ICC LOGO ARE THE TRADENAME AND REGISTERED TRADEMARK OF ICC. ALL RIGHTS RESERVED.